Your Solutions Partner

Specifications

F.O.B Sedalia, Missouri 65301



Approval Stamp(s):

PRODUCT INFORMATION:

PROJECT: _____

ITEM: _____

QUANTITY: _____

MODEL:

Thurmaduke Serving Systems - Tray Dispenser Units

- ❑ **TTD-1014-S** 2 trays per level
- ❑ **TTD-1216-S** 1 trays per level
- ❑ **TTD-1418-S** 1 trays per level
- ❑ **TTD-1520-S** 1 trays per level
- ❑ **TTD-1622-S** 1 trays per level
- ❑ **TTD-1721-S** 1 trays per level

TOP:

- ■ 16 gauge, 300 Series stainless steel
- ■ 10" sloped top

BODY:

- ❑ Choice of (12) powder coat paint colors (must choose one):
  - ❑ #217105 - Designer White
  - ❑ #217150 - Orange Red
  - ❑ #217107 - Hollyberry Red
  - ❑ #217127 - Fence Green
  - ❑ #217102 - Duke Silver
  - ❑ #217101 - Semi-Gloss Black
  - ❑ #217103 - Natural Almond
  - ❑ #217154 - Racing Red
  - ❑ #217120 - Sky Blue
  - ❑ #217152 - Stone Gray
  - ❑ #217113 - Brown Kickplate
  - ❑ #217125 - Textured Black
- ❑ Stainless steel body
- ■ Fully enclosed
- ■ Die-formed corners
- ■ Rear access panel

SELF-LEVELING MECHANISM:

- ■ Cantilever assembly
- ■ Heavy gauge stainless steel
- ■ Stainless steel roller bearings
- ■ Fully field adjustable
- ■ Life-time warranty springs
- ■ Tray capacity of 150 trays

SILVERWARE DISPENSER

- ■ Clear acrylic
- ■ 3/4" heavy gauge stainless steel tubing supports
- ■ 8 silverware cups, 5" deep, 3-1/2" diameter

OPTIONS:

- ❑ 6" Stainless steel legs
- ❑ Dispenser without Silverware Dispenser
- ❑ Veneered plastic laminate panels on body
- ❑ Powder coat paint colors

AGENCY LISTING:

NSF

DUKE MANUFACTURING CO.
2305 N. Broadway
St. Louis, MO 63102

800.735.3853 Toll Free
314.231.1130 In Missouri
314.231.5074 Fax
www.dukemfg.com

SHORT FORM SPECIFICATIONS:

Thurmaduke Serving Systems - Tray Dispenser Units. Top shall be 16ga, 300 series Stainless Steel flanged down edges, flush at ends, sloped for tray pick up, 20ga s/s enclosed body, includes s/s self leveling tray dispenser for trays, 5" dia. NSF approved swivel casters, 2 w/ locks.

Thurmaduke®

Thurmaduke Serving Systems
Tray Dispenser Units

- **TTD-1014-S** 2 trays per level
- **TTD-1216-S** 1 trays per level
- **TTD-1418-S** 1 trays per level
- **TTD-1520-S** 1 trays per level
- **TTD-1622-S** 1 trays per level
- **TTD-1721-S** 1 trays per level

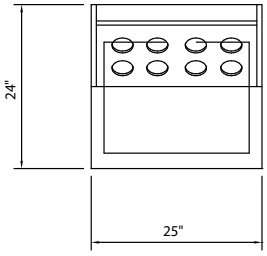

TOP VIEW

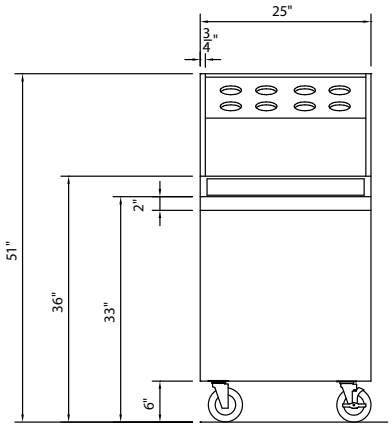

FRONT VIEW

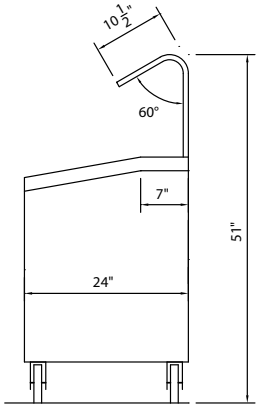

RIGHT SIDE VIEW

DIMENSIONS:

Freight Class: 150

Model	Length		Width		Height		Cube ft. crated	Weight		Top Openings Dimensions			
										Length		Width	
	in.	cm	in.	cm	in.	cm		lbs.	kg	in.	cm	in.	cm
TTD-1014-S	25	63.5	24	61.0	51-1/2	130.8	29.9	188	85.3	23	58.4	18 1//2	47.0
TTD-1216-S	25	63.5	24	61.0	51-1/2	130.8	29.9	188	85.3	21-1/2	54.6	16-1/4	41.3
TTD-1418-S	25	63.5	24	61.0	51-1/2	130.8	29.9	188	85.3	21-1/2	54.6	16-1/4	41.3
TTD-1520-S	25	63.5	24	61.0	51-1/2	130.8	29.9	188	85.3	23	58.4	18-1/2	47.0
TTD-1622-S	25	63.5	24	61.0	51-1/2	130.8	29.9	188	85.3	23	58.4	18-1/2	47.0
TTD-1721-S	25	63.5	24	61.0	51-1/2	130.8	29.9	188	85.3	23	58.4	18-1/2	47.0

Model	Tray Size	# Trays per level
TTD-1014-S	14"L x 10"W	2
TTD-1216-S	16"L x 12"W	1
TTD-1418-S	18"L x 14"W	1
TTD-1520-S	20"L x 15"W	1
TTD-1622-S	22"L x 16" W	1
TTD-1721-S	21"L x 17"W	1

Duke®
Your Solutions Partner

DUKE MANUFACTURING CO.
2305 N. Broadway
St. Louis, MO 63102

800.735.3853 Toll Free
800.231.1130 In Missouri
314.231.5074 Fax
www.dukemfg.com

Specification subject to change

05/11
Printed in U.S.A
© 2011, Duke Manufacturing Co.