Your Solutions Partner

Specifications

F.O.B Sedalia, Missouri 65301

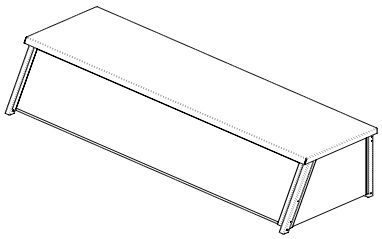

TS-454-32

OPTIONS:

- Full length Fluorescent light
- Heat lamps
- Heat lamps with incandescent lights
- Special lengths
- Powder coat painted frames & shelf

Approval Stamp(s):

PRODUCT INFORMATION:
PROJECT: _____
ITEM: _____
QUANTITY: _____

MODEL: Foodshield - Serving Shelf
Fits: Thurmaduke Steamtable, Heritage, Buffet, AeroServ, Thurmaduke and Expressions Serving Systems

- ❑ TS-454-32
- ❑ TS-454-46
- ❑ TS-454-60
- ❑ TS-454-74
- ❑ TS-454-88

Traditional Serving Shelf/Protector guard and shelf

TOP SHELF:

- 14 gauge stainless steel

FRAMES:

- 1" square stainless steel tubing

GUARDS:

- Flip-down 1/4" thick tempered glass with stainless steel trim
- Full service style
- Clear acrylic encloures both ends

SIZES:

- All units available in following lengths
  31", 45", 59", 73", 87"

Agency Listings:

CLASSIFIED UL EPH
c UL us LISTED

DUKE MANUFACTURING CO.
2305 N. Broadway
St. Louis, MO 63102

800.735.3853 Toll Free
314.231.5074 Fax
www.dukemfg.com

SHORT FORM SPECIFICATIONS:
Foodshield - TS-454 Series Traditional Shelf: Constructed of 1" square stainless steel tubing uprights. Top shelf constructed of 14 gauge stainless steel and straight turndowns on all sides. Food shield to flip-out for cleaning and constructed of 1/4" thick glass with stainless steel edging. Fluorescent lights, heat lamps and heat lamps with incandescent lights are available.

NSF Updates: (1) Made shelf deeper

A.I.A. File No. 35-C-13

Catalog No. FS-PGUARD

FOODSHIELD- PROTECTOR GUARD

FOODSHIELD - PROTECTOR GUARD

TS-454-32
TS-454-46
TS-454-60 Traditional Serving Shelf
TS-454-74
TS-454-88

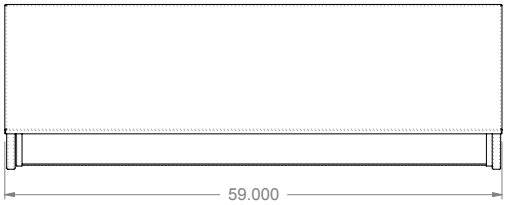

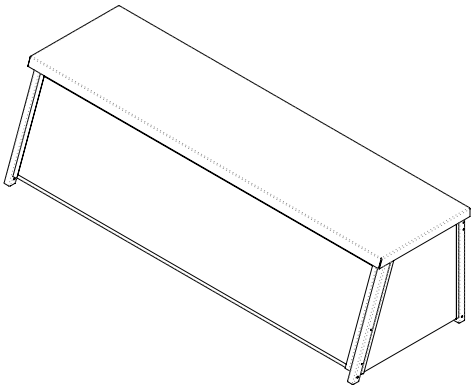

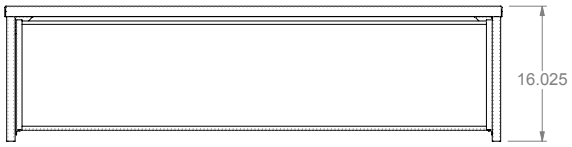

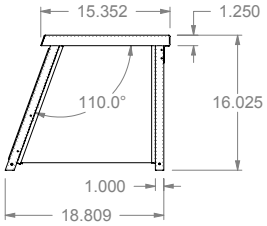

DIMENSIONS:
Traditional Serving Shelves

Freight Class: 125

Model	Length		Height		Width		Weight		Cube ft. Crated	Fluorescent Light 120V / 1 Phase		Heat Lamps 120V / 1 Phase		Heat Lamps with Incandescent Lights 120V / 1 Phase	
	in.	cm	in.	cm	in.	cm	lbs.	kg		Watts	Amps	Watts	Amps	Watts	Amps
TS-454-32	31	79	16	40	15.35	39	32	14.6	6.7	15	0.13	250	2.08	370	3.08
TS-454-46	45	114	16	40	15.35	39	40	18.2	9.3	15	0.13	575	4.79	755	6.29
TS-454-60	59	150	16	40	15.35	39	50	22.7	11.9	30	0.25	800	6.67	1040	8.67
TS-454-74	73	185	16	40	15.35	39	58	26.4	14.5	30	0.25	900	7.50	1140	9.50
TS-454-88	87	221	16	40	15.35	39	67	30.5	17.1	30	0.25	1150	9.58	1510	12.58

DUKE MANUFACTURING CO.
2305 N. Broadway
St. Louis, MO 63102

800.735.3853 Toll Free
800.231.1130 In Missouri
314.231.5074 Fax
www.dukemfg.com

Specification subject to change

11/10
Printed in U.S.A

© 2010, Duke Manufacturing Co.